Logistec

Logistec CQE12R Electric Reach Stacker

Best choice for narrow aisle, non-standard pallet and high shelf stacking;
All solenoid valve control ensure operation accurate and reliable;
EPS control makes steering operation more efficient and comfortable.

Logistec CQE12R Electric Reach Stacker

Performance

- The innovative AC system offer strong power, accurate control, excellent performance.
- High strength vertical gearbox, longer working lift.
- Low-noise but durable hydraulic unit, good quality cylinder as well as house ensure the high reliability of hydraulic system.
- AMP connector electric wires and cables, greatly reducing electric parts failure rate.
- H shape mast channel improves the strength of the whole truck.
- Applied with electric valve on and better heat releasing systems support long time operation

Safety

- Safe hydraulic system design prevents mast from falling down abruptly when hydraulic pipeline cuts off.
- Emergency reverse belly button protects the operator from getting hurt.
- Emergency disconnector will cut off power source to avoid accident when truck goes out of control.
- Multiple lifting limit protection ensure safety.
- Anti-rolling back brake keeps the truck from skidding down when truck is out of control or travelling on ramp
- Electric valve will be locked up when power is cut off.
- Dual-monitoring power steering.
- Automatically slow down speed when in turn (EPS)

Operation

- With the new design of ergonomic tiller head, all buttons can be reached conveniently & comfortably
- Foldable platform reduces vibration which makes operator feel more comfortable.
- Compact design, flexible and operational.
- When platform is folded, truck can work at low speed in smaller space.
- Ergonomically designed safe guard with high strength feature
- Electric proportional valve equipped as standard feature.
- Electric power steering, smooth & comfortable (EPS).

Maintenance

- AC traction motor, maintenance free.
- Hour meter and battery indicator remind the operator of battery charging.
- Easily remove the back cover by only loosing six bolts: Access to all key components for inspection, maintenance, and replacement.
- Vertical motor makes the inspection & service much more convenient
- Control system allows easy troubleshooting
- Low voltage lift cut off design protects the battery

Logistec CQE12R Electric Reach Stacker

Specifications

Distinguishing mark	1.1	Manufacturer			Logistec
	1.2	Model designation			Logistec CQE12R Electric Reach Stacker
	1.3	Drive unit			Electric
	1.4	Operator type			Standing
	1.5	Rated capacity	q	kg	1200
	1.6	Load center distance	c	mm	500
	1.8	Load distance, Centre of drive axel to fork	x	mm	346
	1.9	Wheelbase	y	mm	1310
Service Weight	2.1	Service weight (include battery)		kg	1745
	2.3.1	Axle loading, unladen front/rear		kg	1052/782
	2.4.1	Axle loading, fork advance, laden front/rear		kg	454/2510
	2.5.1	Axle loading, fork retracted, laden front/rear		kg	1110/1875
Tyres/chassis	3.1	Tyre type			Polyurethane
	3.2.1	Tyre size, front		mm	Φ230 x 75
	3.3.1	Tyre size, rear		mm	Φ210 x 85
	3.4	Additional wheels		mm	Φ130 x 55
	3.5.1	Wheels, number front/rear (x=drive wheels)		mm	1x +2/2
	3.6	Tread, front	b10	mm	634
	3.7	Tread, rear	b11	mm	900
Dimensions	4.1	Tilt of mast/fork carriage forward/backward	α/β	°	2/4
	4.2	Height, mast lowered	h1	mm	2065
	4.3	Free lift	h2	mm	-
	4.4	Lift height	h3	mm	3000
	4.5	Height, mast extended	h4	mm	4000
	4.7	Height of overhead/ guard cabin	h6	mm	-
	4.8	Seat height/standing height	h7	mm	150
	4.10	Height of wheel arms	h8	mm	235
	4.19	Overall length	l1	mm	2312
	4.20	Length to face of forks	l2	mm	1242
	4.21	Overall width	b1/b2	mm	850/988
	4.22	Fork dimensions	s/e/l	mm	40/100/1070
	4.23	A,B Fork carriage class/type A, B			2A
	4.24	Fork carriage width	b3	mm	956
	4.25	Distance between fork-arms	b5	mm	200-650
	4.26	Distance between wheel arms/loading surfaces	b4	mm	698
	4.28	Reach distance	l4	mm	500
	4.31	Ground clearance, laden, below mast	m1	mm	75
	4.32	Ground clearance, center of wheelbase	m2	mm	70
	4.34.1	Aisle width for pallets 1000×1200 crossways	Ast	mm	2684
	4.34.2	Aisle width for pallets 800×1200 crossways	Ast	mm	2739
	4.36	turning radius	Wa	mm	1597
	4.37	Length across wheel arms	l7	mm	1700
Performance data	5.1	Travel speed, laden/unladen		km/h	5.5/6.0
	5.2	Lifting speed, laden/unladen		m/s	0.12/0.15
	5.3	Lowering speed, laden/unladen		m/s	0.18/0.12
	5.4	Reaching speed, laden /unladen		m/s	0.08/0.12
	5.8	Max. gradeability, laden/unladen		%	6/10
	5.10	Service brake			Electromagnetic
	5.11	Parking brake			Mechanical
Electric-engine	6.1	Drive motor rating S2 60 min		kw	1.6
	6.2	Lift motor rating at S3 15%		kw	3
	6.4	Battery voltage/nominal capacity		V/ah	24/210
	6.5	Battery weight		kg	190
Addi-tion	8.1	Type of drive unit			AC
	10.5	Steering design			Electronic
	10.7	Sound pressure level at the driver's ear		dB(A)	74

If there are improvements of technical parameters or configurations, no further notice will be given.
The diagram shown may contain non-standard configurations.

Specifications

1.Service weight (include battery)

Mast height(mm)	Service Weight (kg)
2 - Stage Mast	CQE12R
2500	1710
2700	1725
3000	1745
3300	1765
3600	1785
4000	1810
4300	1830
3 - Stage Mast	CQE12R
3500	1880
4000	1910
4500	1940
4800	1960
5000	1970
5500	2000

2.Battery

CQE12R	
Standard	Option
210	280
190	230

3.Mast

Without Side Shift			
2 - Stage Mast			
Lift(h)	Lowered Mast(h)	Extended Mast(h)	
h3	h1	h4	h4(,*)
2500	1815	3500	3075
2700	1915	3700	3275
3000	2065	4000	3575
3300	2215	4300	3875
3600	2365	4600	4175
4000	2565	5000	4575
4300	2715	5300	4875
Note (,*) for without backrest			

With Side Shift			
2 - Stage Mast			
Lift(h)	Lowered Mast Height	Extended Mast(h)	
h3	h1	h4	4(,*)
2500	1815	3525	3075
2700	1915	3725	3275
3000	2065	4025	3575
3300	2215	4325	3875
3600	2365	4625	4175
4000	2565	5025	4575
4300	2715	5325	4875
Note (,*) for without backrest			

3 - Stage Mast					
Lift(h)	Lowered Mast Height	Free Lift		Extended Mast(h)	
h3	h1	h2	h2(,*)	h4	h4(,*)
3500	1735	740	1165	4500	4075
4000	1900	905	1330	5000	4575
4500	2065	1070	1495	5500	5075
4800	2165	1170	1595	5800	5375
5000	2230	1235	1660	6000	5575
5500	2395	1400	1825	6500	6075
Note (,*) for without backrest					

3 - Stage Mast					
Lift(h)	Lowered Mast Height	Free Lift		Extended Mast(h)	
h3	h1	h2	h2(,*)	h4	h4(,*)
3500	1735	715	1165	4525	4075
4000	1900	880	1330	5025	4575
4500	2065	1045	1495	5100	5075
4800	2165	1145	1595	5400	5375
5000	2230	1210	1660	5600	5575
5500	2395	1375	1825	6100	6075
Note (,*) for without backrest					

Logistec CQE12R Electric Reach Stacker

Specifications

4.Dimensions (mm)

CQE12R					
		Without Side Shift		With Side Shift	
		2-Stage Mast	3-Stage-Mast	2-Stage Mast	3-Stage-Mast
Overall length (minimum)	l1	2312	2354	2347	2389
Length to face of forks	l2	1242	1284	1277	1319
Reach distance	l4	490	450	450	415
Aisle width for pallets 1000×1200 crossways	Ast	2684	2715	2710	2742
Aisle width for pallets 800×1200 lenthways	Ast	2739	2777	2770	2808
Aisle width for pallets 1000×1200 lenthways	Ast	2786	2822	2816	2853
Aisle width for pallets 800×1200 crossways	Ast	2549	2575	2605	2597

Rated Capacities Graph

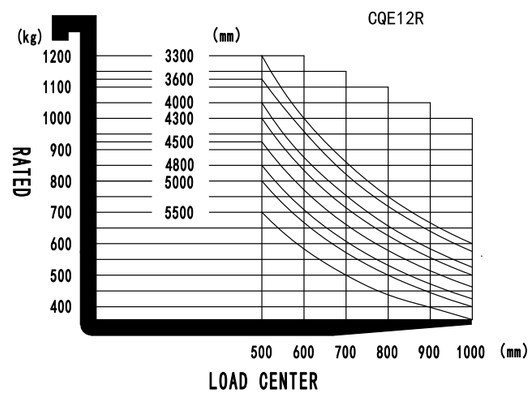

Options

No.	Option items	Logistec CQE12R
1.1	Fork dimension	● 900*600 2A 100*40*920 ○ 900*600 2A 100*40*1070 ○ 900*600 2A 100*40*1150 ○ 900*600 2A 100*40*1220 ○ 900*600 2A 100*40*1370 ○ 900*600 2A 100*40*1520 ○ 900*600 2A 100*40*1800
1.3	Fork lowered height	● 40
1.5	Fork carriage height	● 36in
2.2	Load wheel material	● Polyurethane
2.3	Drive wheel material	● Polyurethane
2.7	Battery capacity	○ 210Ah ○ 280Ah ○ 205Ah(Li-ion)
2.8	Charger	● 24V-30AExternal Lead-acid ○ 24V-100AExternal
2.9	Battery indicator	● With time (Bluetooth)
2.11	Attachments	● No ○ Fork positioner
3.2	Fork carriage	● Yes and not customized
3.3	Castor wheels	● Yes and not customized
3.4	Water auto-filling system	● No ○ Yes and not customized
3.7	Warning lamp	● Yes and not customized
3.11	Rearview mirror	● No ○ Yes and not customized
3.12	Buzzer	● Yes and not customized
3.23	Remote monitoring	● No ○ Yes and not customized (only for Li-ion battery)
3.24	Side supports	● Yes and not customized
4.1	Battery side pull function	● Yes and not customized
4.2	Cold storage	● No ○ Yes and not customized
4.5	Proportional lift system	● Yes and not customized
4.7	Overhead guard	● No ○ Yes and not customized
5.1	Battery side pull attachment	● No ○ Side pull trolley
	Note ● Standard ○ Optional - n/a	

Logistec CQE12R Electric Reach Stacker

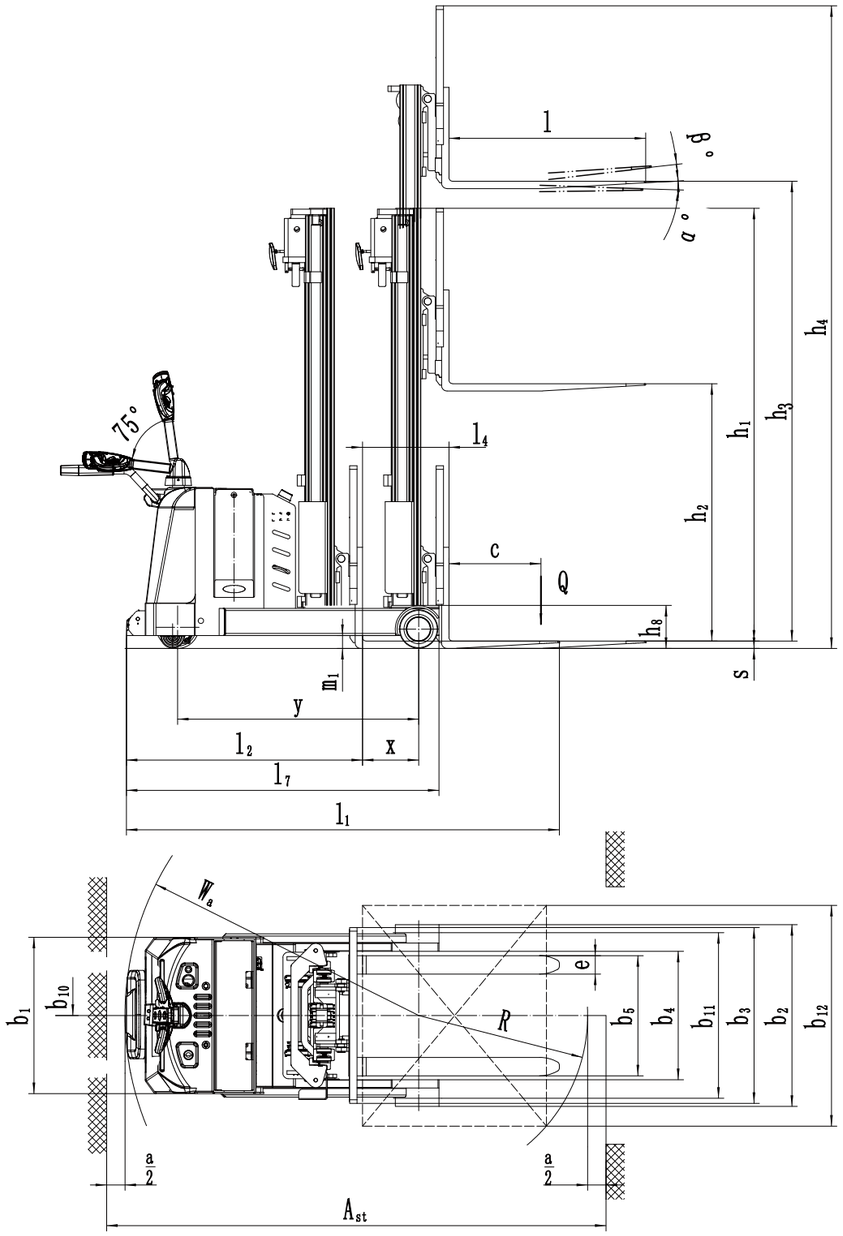

SITECRAFT

MATERIALS HANDLING EQUIPMENT

www.sitecraft.net.au | 1300 363 152 | sales@sitecraft.com.au