Logimove

Elevated Work Assist Vehicle
Order Picking Lift Vehicle

Logistec

Specifications

Max. Platform height: 2.99m;
Truck size: 1365x1440x750mm, turning radius (1260), suitable for narrow spaces;
Light and flexible;
AGM Battery (maintenance free), Li-Ion as option.

Dcistinguishing mark	1.1	Manufacturer			Logistec	Logistec
	1.2	Model designation			JX0(Li-ion)	JX0
	1.3	Drive unit			Electric	Electric
	1.4	Operator type			Order-picker	Order-picker
	1.5	Rated capacity	Q	kg	90/110/136	90/110/136
	1.6	Load center distance	C	mm	-	-
	1.8	Load distance centre of drive axle to fork	X	mm	-	-
	1.9	Wheelbase	Y	mm	1095	1095
Service Weight	2.1	Service weight		kg	800	800
	2.2	Axle loading, laden front/rear		kg	590/410	590/410
	2.3	Axle loading, unladen front/rear		kg	380/420	380/420
Tyres/chassis	3.1	Tyre type			Polyurethane/Solid rubber	Polyurethane/Solid rubber
	3.2	Tyre size, front		mm	Ø 210×70	Ø 210×70
	3.3	Tyre size, rear		mm	Ø 250×100	Ø 250×100
	3.4	Additional wheels		mm	Ø 74×48	Ø 74×48
	3.5	Wheels, number front/rear (x=drive wheels)		mm	1x 2/2	1x 2/2
	3.6	Tread, front	b10	mm	545	545
	3.7	Tread, rear	b11	mm	640	640
Dimensions	4.2	Height, mast lowered	h1	mm	1365	1365
	4.3	Free lift	h2	mm	485	485
	4.4	Lift height	h3	mm	3485	3485
	4.5	Height, mast extended	h4	mm	4365	4365
	4.7	Height of overhead/ guard cabin	h6	mm	1410	1410
	4.8	Seat height/standing height	h7	mm	285	285
	4.14	Stand height, elevated	h12	mm	3000	3000
	4.15	Lowered height	h13	mm	-	-
	4.19	Overall length	l1	mm	1440	1440
	4.20	Length to face of forks	l2	mm	-	-
	4.21	Overall width	b1/b2	mm	750	750
	4.22	Fork dimensions	s/e/l	mm	-	-
	4.25	Distance between fork-arms	b5	mm	-	-
	4.32	Ground clearance, center of wheelbase	m2	mm	35	35
	4.34.1	Aisle width for pallets 1000×1200 crossways	Ast	mm	-	-
	4.34.2	Aisle width for pallets 800×1200 crossways	Ast	mm	-	-
	4.35	Turning radius	Wa	mm	1260	1260
Performance data	5.1	Travel speed, laden/unladen		km/h	6/6.5	6/6.5
	5.2	Lifting speed, laden/unladen		m/s	0.22/0.27	0.22/0.27
	5.3	speed, laden/unladen		m/s	0.31/0.25	0.31/0.25
	5.8	Max. gradeability, laden/unladen		%	5/8	5/8
	5.10	Service brake			Electromagnetic	Electromagnetic
Electric-engine	6.1	Drive motor rating S2 60 min		kw	0.65	0.65
	6.2	Lift motor rating at S3 15%		kw	2.2	2.2
	6.4	Battery voltage/nominal capacity		V/ah	24V/120	24V/120
	6.5	Battery weight		kg	50	71
Addition data	8.1	Type of drive unit			DC	DC
	10.5	Steering design			Electronic	Electronic
	10.7	Sound pressure level at the driver's ear		dB(A)	60	60

If there are improvements of technical parameters or configurations, no further notice will be given.
The diagram shown may contain non-standard configurations.

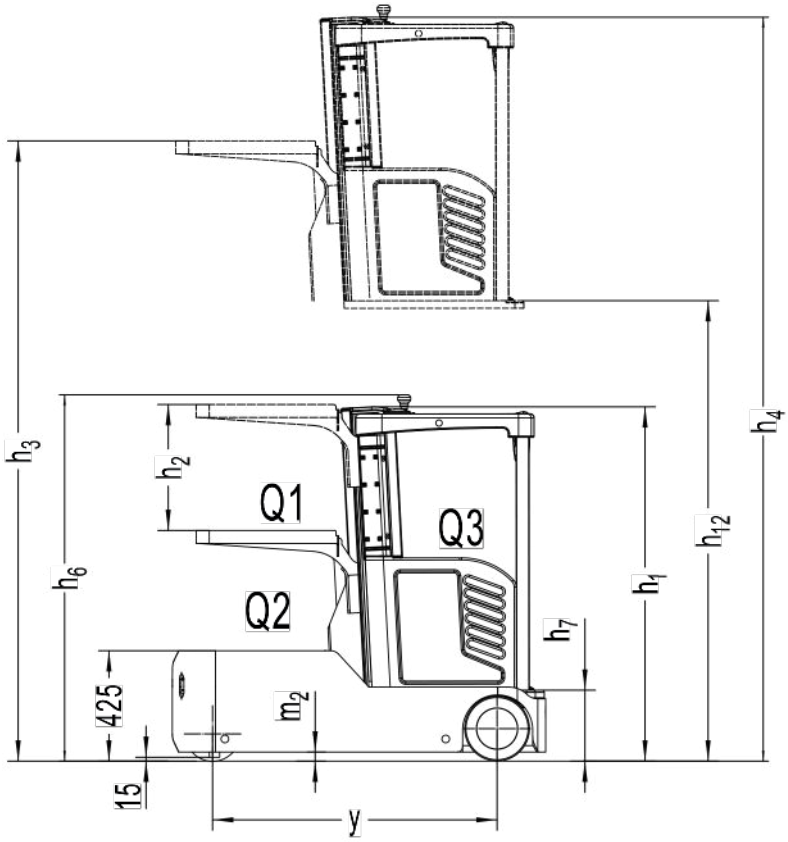

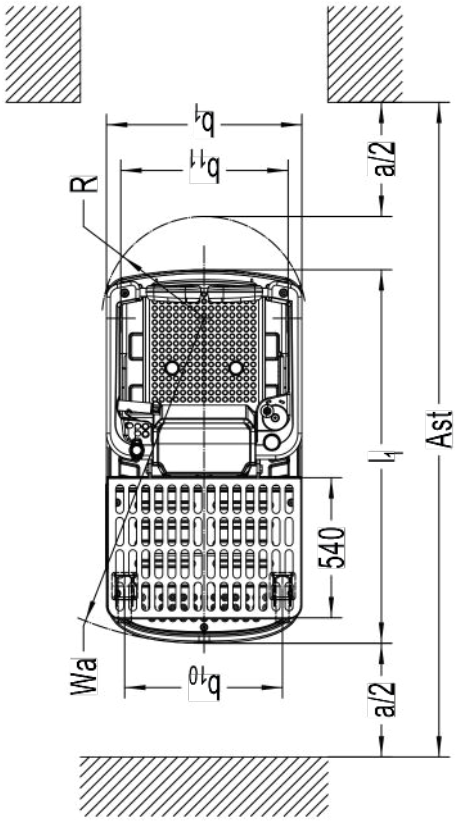

Options

No.	Option items	JX0
2.1	Load wheel type	● Single
2.2	Model designation	● PU
2.3	Load wheel material PU	● PU
2.7	Drive wheel material	● 120 ah
2.8	Battery capacity	● 24V-15A External
2.9	Charger	● White Time
3.3	Battery indicator	● Yes and not customosed
3.9	Castor wheels	● Front blue lamp
3.12	Blue lamp	● Lowering ○ Driving ○ Reversing
3.18	Hummer	● No ○ Yes and not customised
3.20	Guide wheel	● No ○ Yes and not customised
4.7	Step on the safety switch with both feet	● No
	Note ● Standard ○ Optional - Inconformity	

SITECRAFT
MATERIALS HANDLING EQUIPMENT

1300 363 152
Sales@sitecraft.net.au
www.sitecraft.net.au

Melbourne
17 Macquarie Drive
Thomastown, VIC, 3074

Sydney
2/15 Bonz Place,
Seven Hills, NSW 2147

Canberra

Brisbane

Adelaide